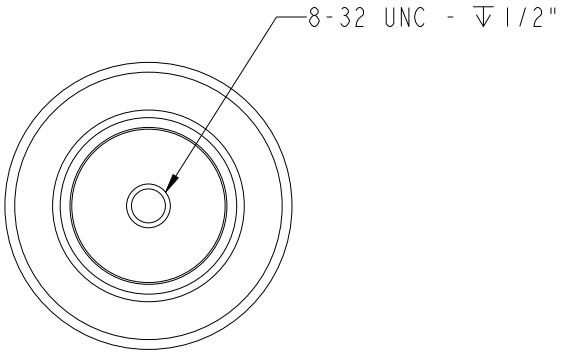

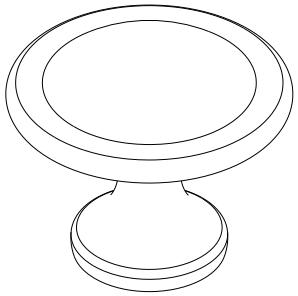

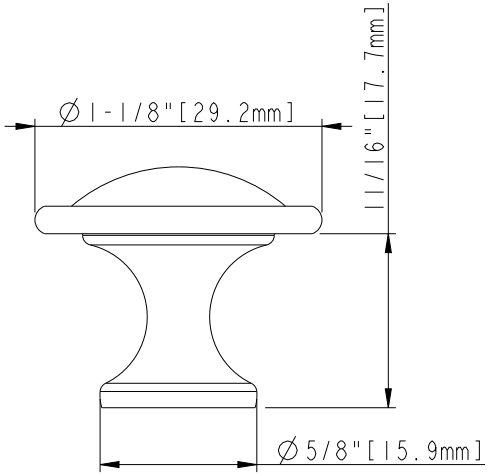

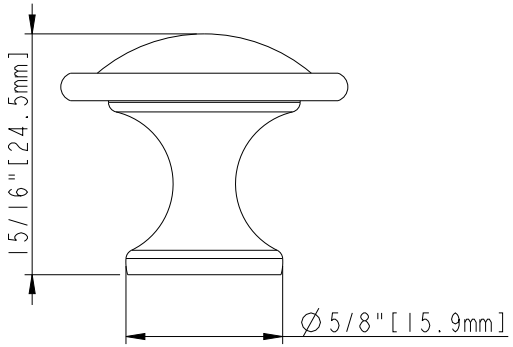

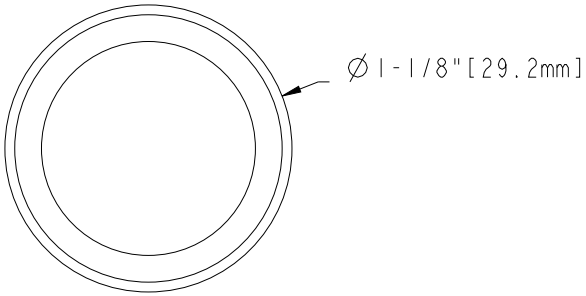

ACCESSORY:
SCREW:8-32X1" 1PCS
BREAK AWAY SCREW:8-32x45 1PCS
ALL SCREW MATERIAL:STEEL-SAE1006

hardware resources	ITEM#: 647		MATERIAL: Zamak 3
	Finish:		WEIGHT: 27.7g/0.060lbs
			PROJECTION
PROPRIETARY AND CONFIDENTIAL THE INFORMATION CONTAINED IN THIS DRAWING IS THE SOLE PROPERTY OF HARDWARE RESOURCES INC. ANY REPRODUCTION IN PART OR AS A WHOLE WITHOUT THE WRITTEN PREMISSION OF HARDWARE RESOURCES INC. IS PROHIBITED.	TOLERANCE UNLESS OTHERWISE SPECIFIED: X ±0.20 X.X ±0.10 X.XX ±0.05 ANGULAR: ±0.5° DO NOT SCALE DRAWING	UNITS:	DRAWN BY: Alexander.W	DATE: Dec-17-20
		SIZE:	APPROVED BY:	DATE:
		SHEET:	RELEASE LEVEL:	REVISION: